BOTTOM VIEW

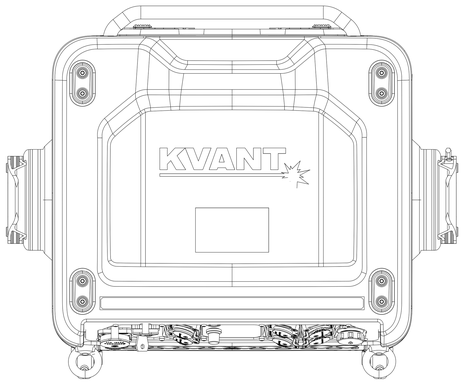

SIDE VIEW

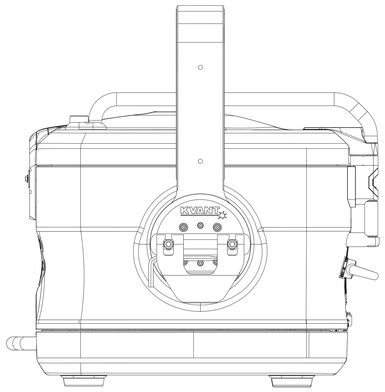

FRONT VIEW

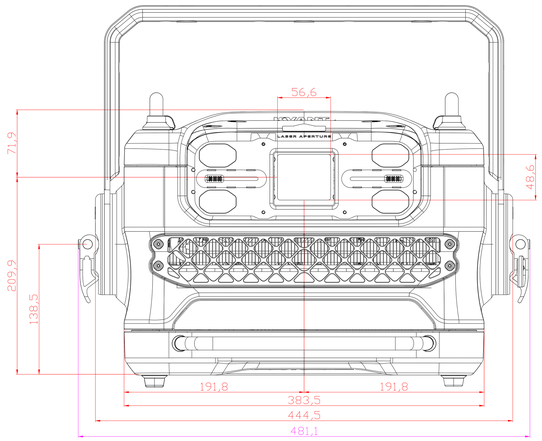

SIDE VIEW

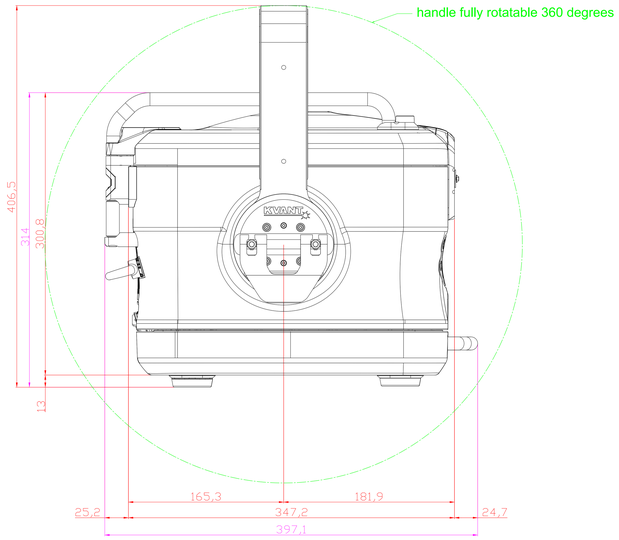

REAR VIEW

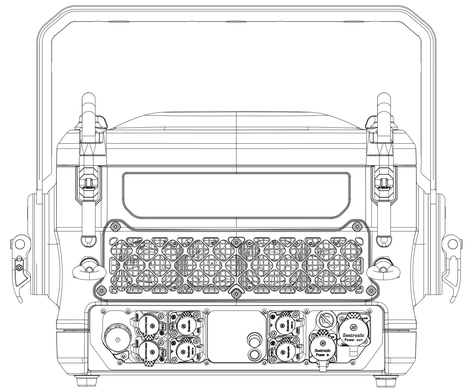

AIR FLOW AIR FLOW AIR FLOW AIR FLOW

TOP VIEW

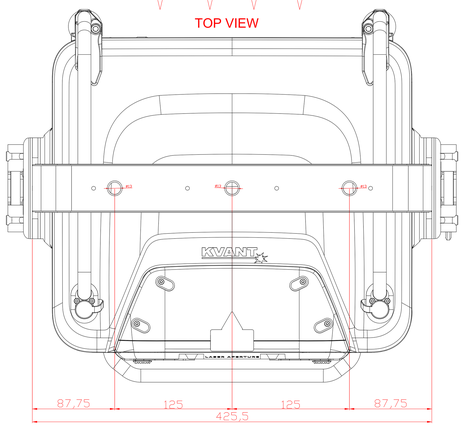

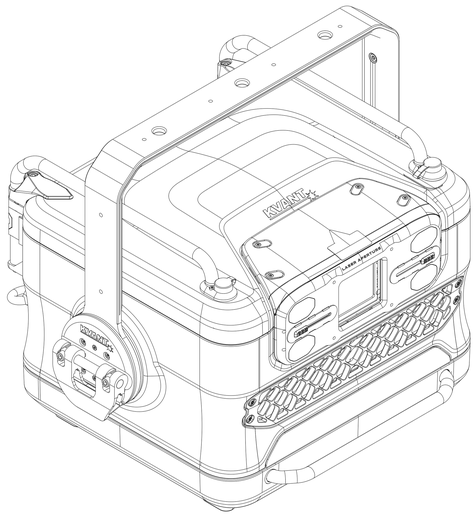

Purple: Overall dimensions, including all the fittings and extrusions; without the 360º swivel bracket

Total airflow needed for the laser projector: 272 cubic metres per hour