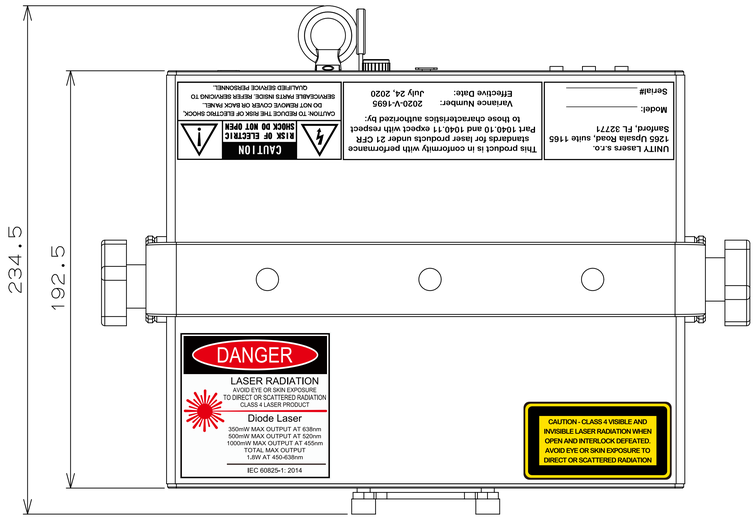

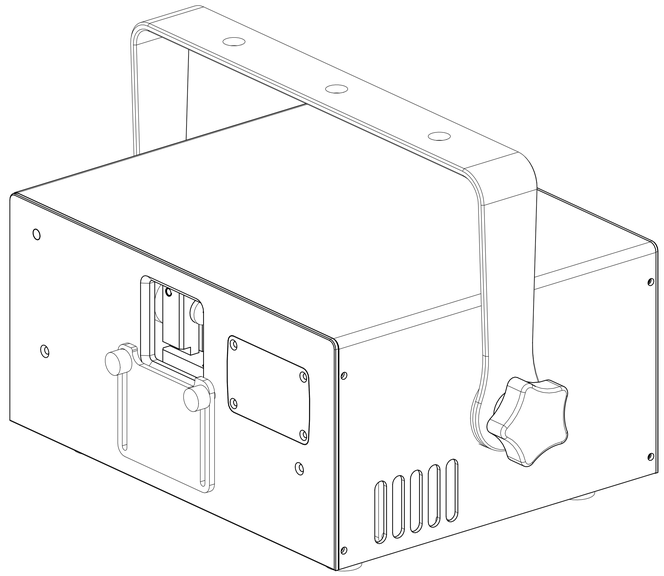

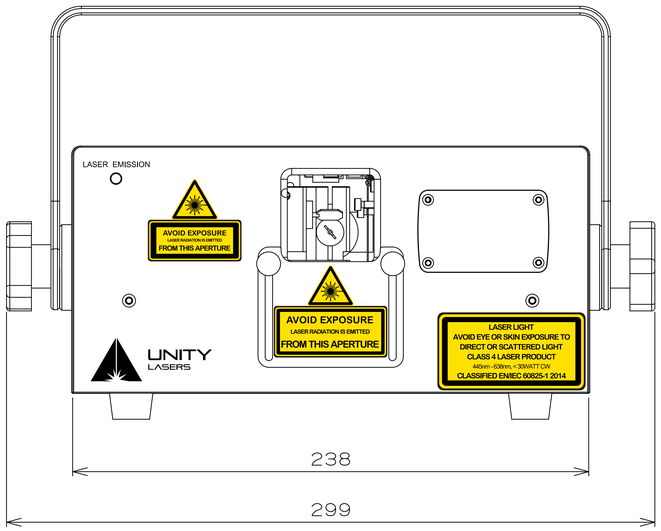

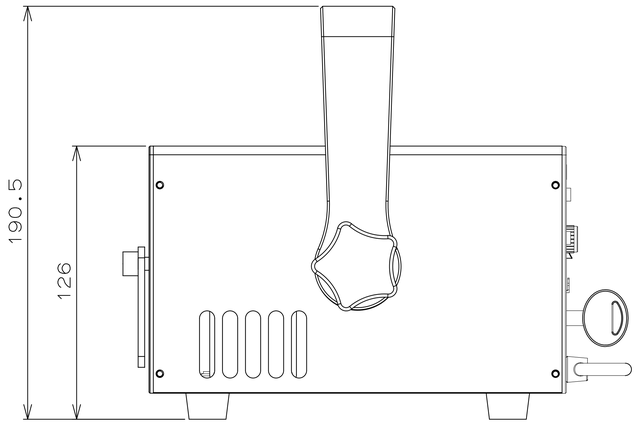

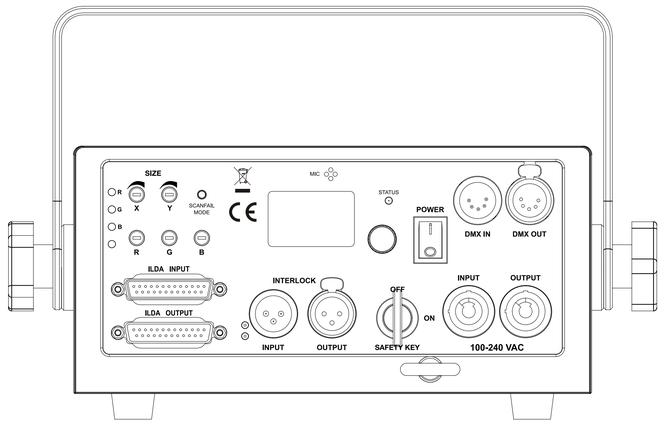

DO NOT MEASURE FROM THIS DRAWING.

MA204-A