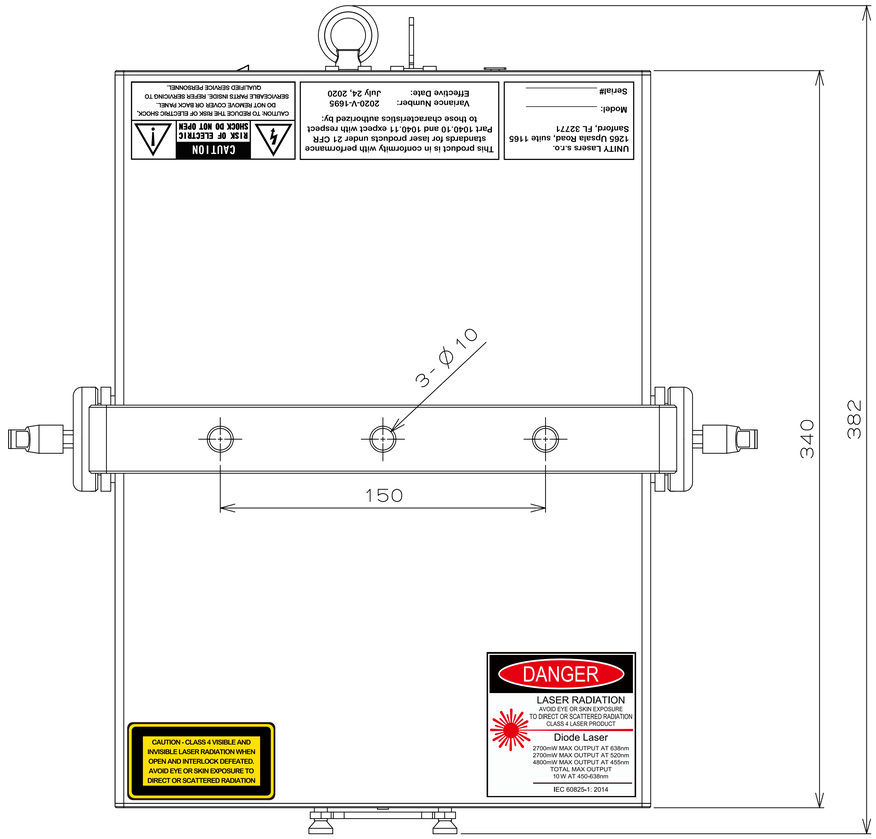
3- Ø10
150
340
382
DANGER
LASER RADIATION
AVOID EYE OR SKIN EXPOSURE
TO DIRECT OR SCATTERED RADIATION
CLASS 4 LASER PRODUCT
Diode Laser
2700mW MAX OUTPUT AT 638nm
2700mW MAX OUTPUT AT 520nm
4800mW MAX OUTPUT AT 455nm
TOTAL MAX OUTPUT
10 W AT 450-638nm
IEC 60825-1: 2014
CAUTION - CLASS 4 VISIBLE AND INVISIBLE LASER RADIATION WHEN OPEN AND INTERLOCK DEFEATED. AVOID EYE OR SKIN EXPOSURE TO DIRECT OR SCATTERED RADIATION.
UNITY LASERS 1265 Upsala Road, suite 1165
Sanford, FL 32771
Model: _____
Serial# _____
This product is in conformity with performance standards for laser products under 21 CFR Part 1040.10 and 1040.11 expect with respect to those characteristics authorized by:
Variance Number: 2020-V-1695
Effective Date: July 24, 2020
CAUTION
RISK OF ELECTRIC SHOCK DO NOT OPEN
CAUTION: TO REDUCE THE RISK OF ELECTRIC SHOCK, DO NOT REMOVE COVER OR BACK PANEL. SERVICEABLE PARTS INSIDE. REFER SERVICING TO QUALIFIED SERVICE PERSONNEL.

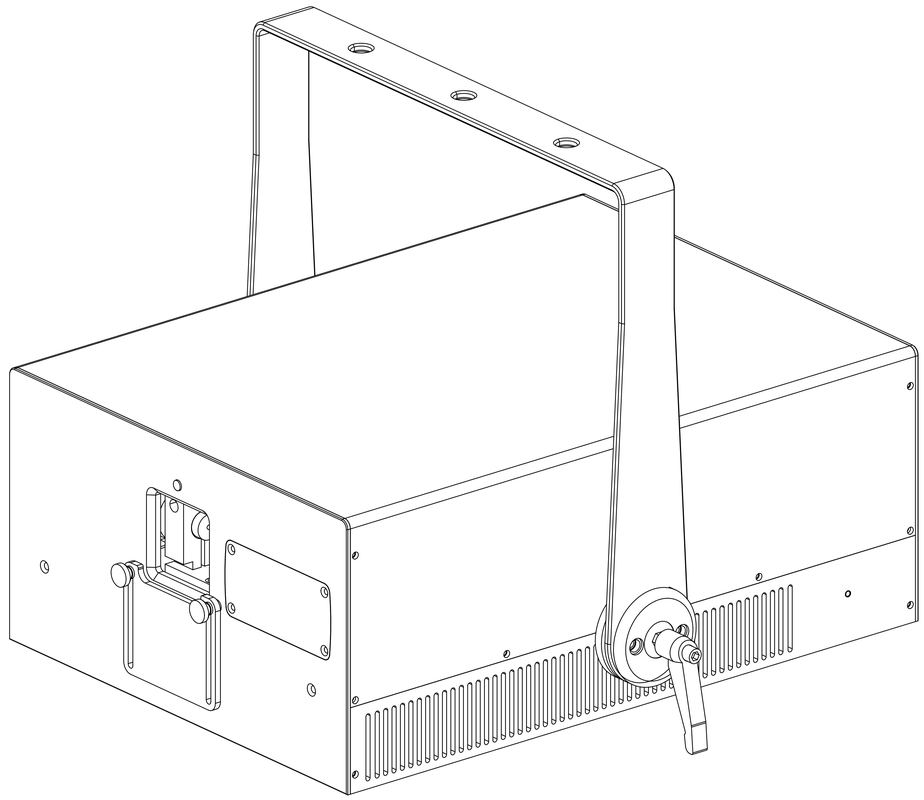

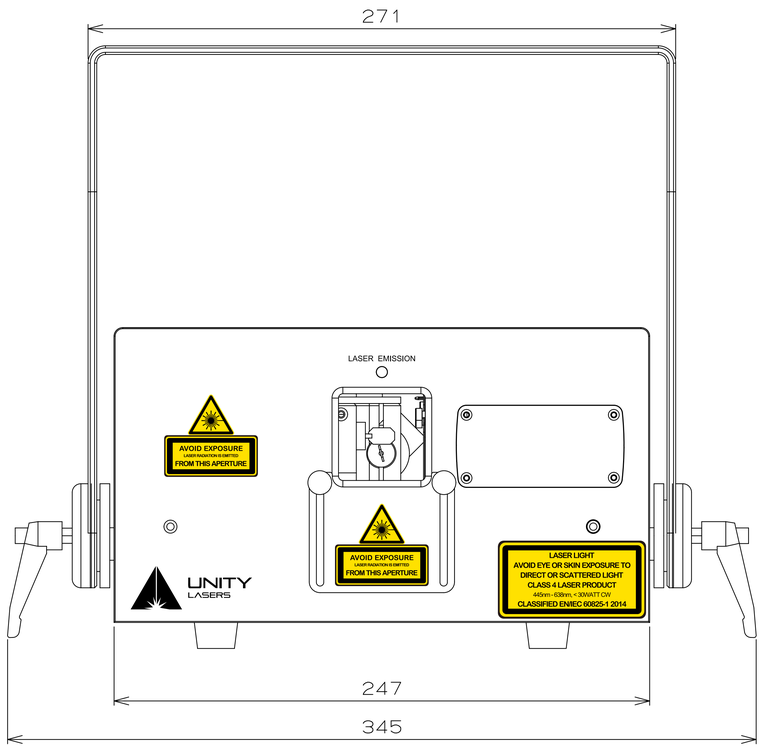
271
LASER EMISSION
AVOID EXPOSURE
LASER RADIATION IS EMITTED
FROM THIS APERTURE
AVOID EXPOSURE
LASER RADIATION IS EMITTED
FROM THIS APERTURE
LASER LIGHT
AVOID EYE OR SKIN EXPOSURE TO
DIRECT OR SCATTERED LIGHT
CLASS 4 LASER PRODUCT
445nm -638nm, < 30WATT CW
CLASSIFIED ENIEC 60825-1 2014
UNITY LASERS
247
345

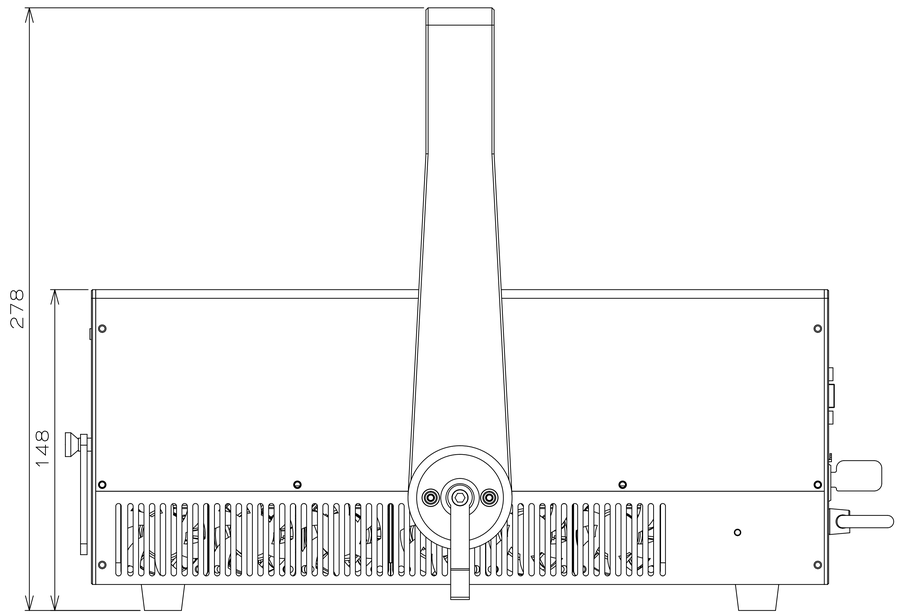
278
148

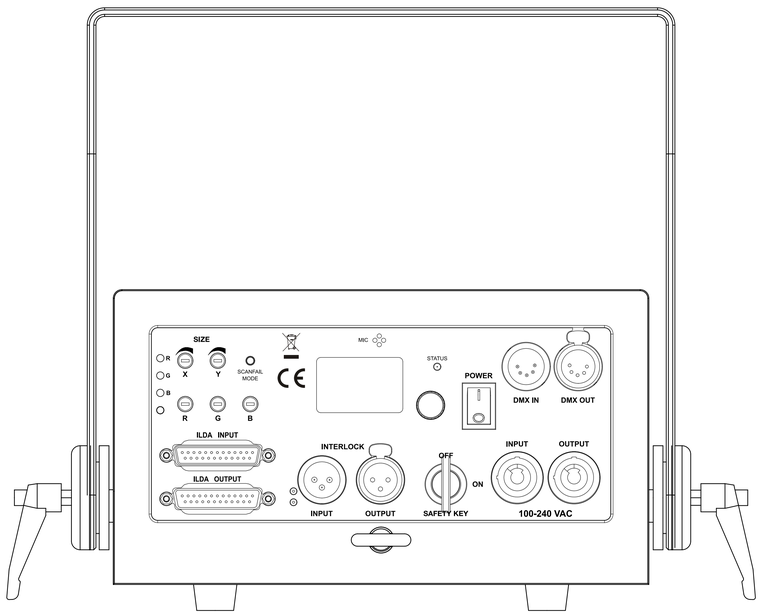
SIZE
R
G
B
X
Y
SCAN/FAIL MODE
R
G
B
MIC
STATUS
POWER
DMX IN
DMX OUT
ILDA INPUT
ILDA OUTPUT
INTERLOCK
INPUT
OUTPUT
OFF
ON
SAFETY KEY
INPUT
OUTPUT
100-240 VAC