Bottom view

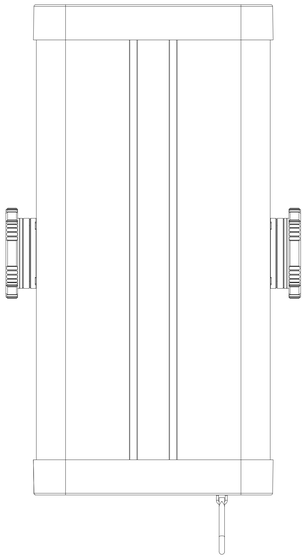

Front view

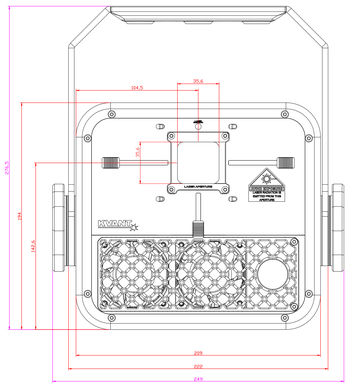

Side view

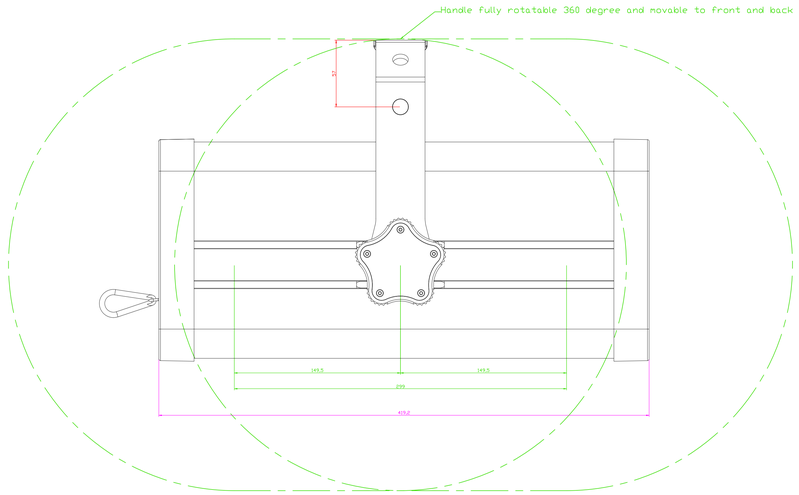

Back view

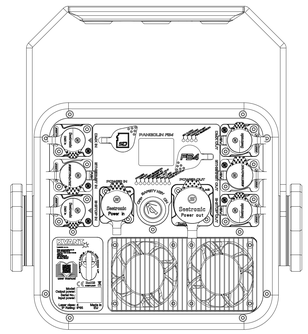

Top view

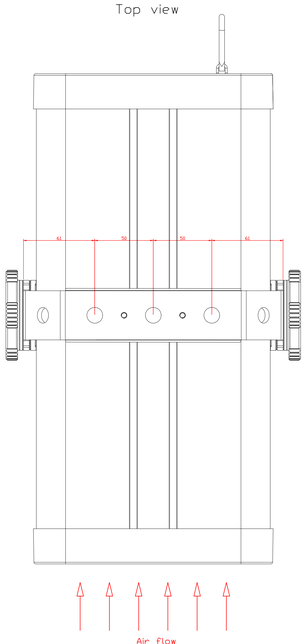

Overall dimensions of the laser projector are highlighted by purple
Airflow required for cooling: 180 cubic meter per hour